Installation manual

Window frame (straight)

V785 Serena

Verano®

Required tools

- Drilling machine
- Metal drill
- Crosshead screwdriver
- Allen key set
- Tapeline
- Level
- Pencil
- Screwdriver
- Silicone kit (Acid Free)

Important before mounting

General warning
Mounting the Verano® product yourself is at your own risk. Only use this instruction as a tool and for the mounting of this specific Verano® product. If you cannot install the product yourself, you can always opt for professional mounting. The mounting team of Verano® is pleased to help you.

- Be careful for damages. Don't use a knife or any other sharp object when opening the packing. This may cause damage to the content of the assembly. Put the content of the assembly on a soft surface.

- Be careful when drilling, falling drill cuttings can cause damages.

- Clean, degrease and dry off the sides of the opening wherein the window frame will be installed.

- Remove all the dust, loose plaster and other unevenness for a perfect closure.

General - Mounting

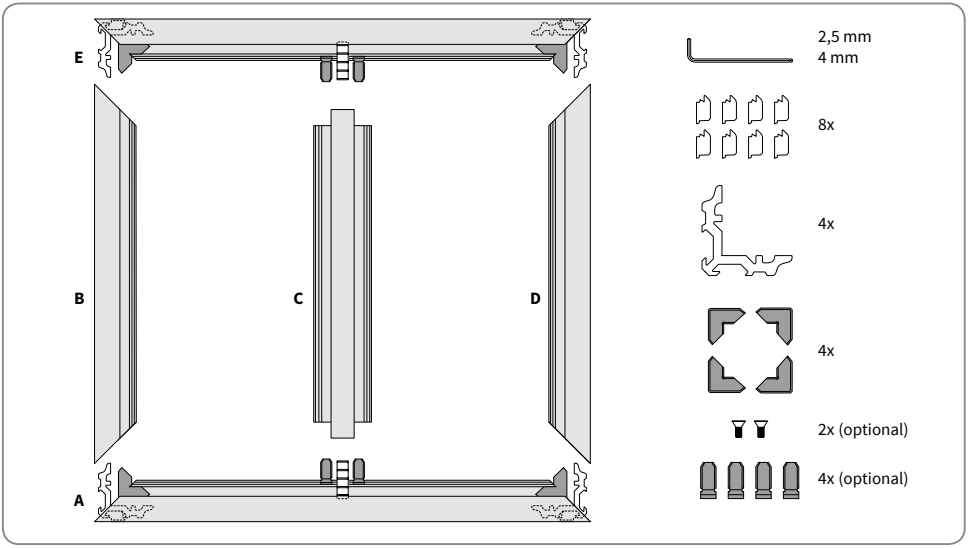

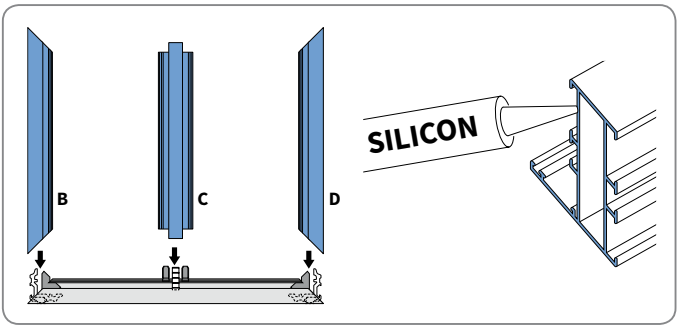

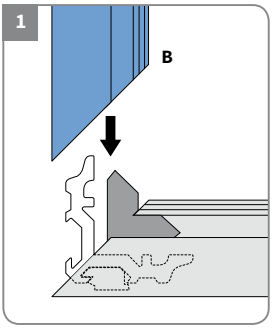

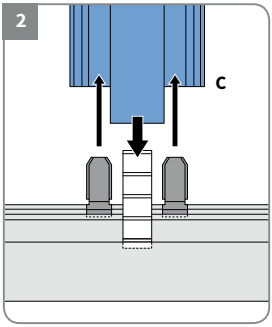

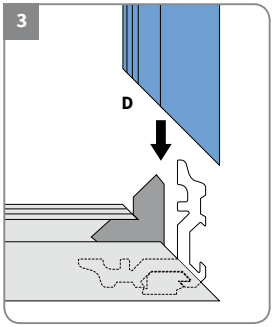

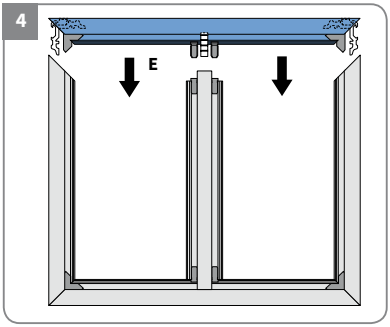

5

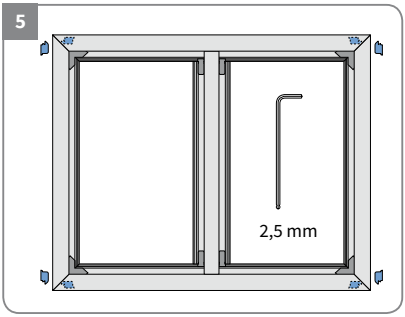

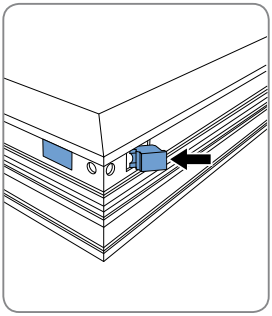

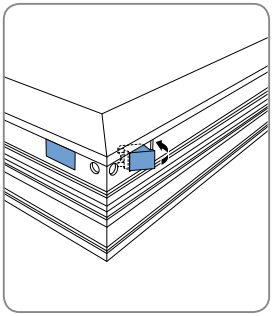

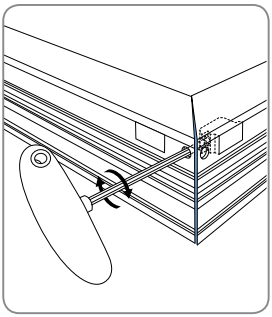

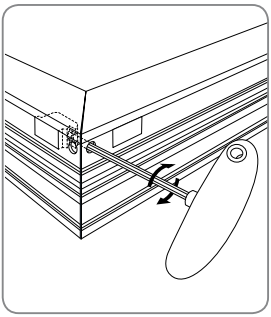

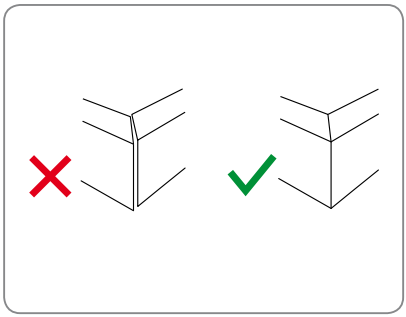

6

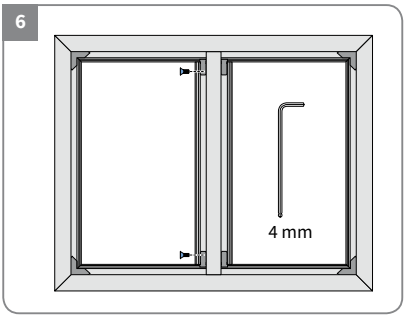

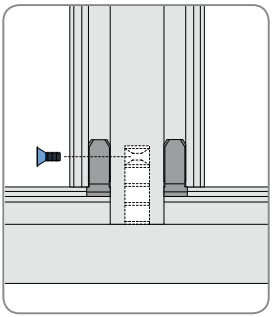

Installation for veranda

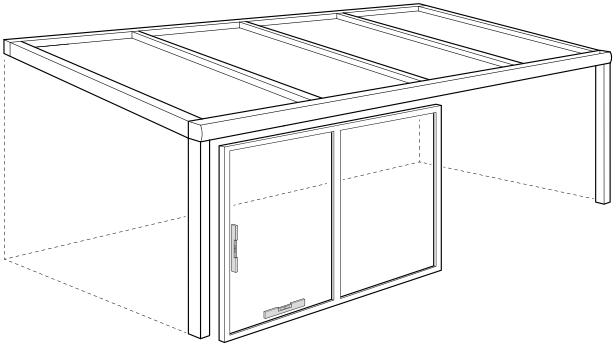

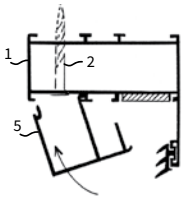

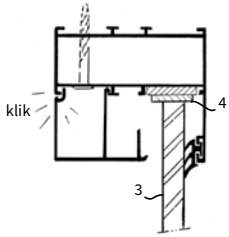

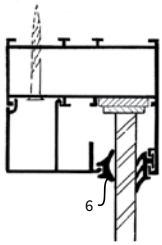

1. Install the window frame.
2. Level mount on the surface. Which mounting material you use is depending on the surface.
3. Screw to pillar and optionally to the gutter 4,8 x 45 mm.

   Attention: To prevent leakage in the gutter use washers and silicon for the drilling holes.
4. Install the filling or glass.
5. Align the filling using the filling plates .

   Attention: The filling or glass needs a backlash of around 7 mm. The filling plates below make sure that the backlash of the filling or glass below and above on the left and right side are the same.
6. Install the glazing bars.
   Sequence: first install above and below (click-in), than left and right.
7. Cut the rubber to length and apply.

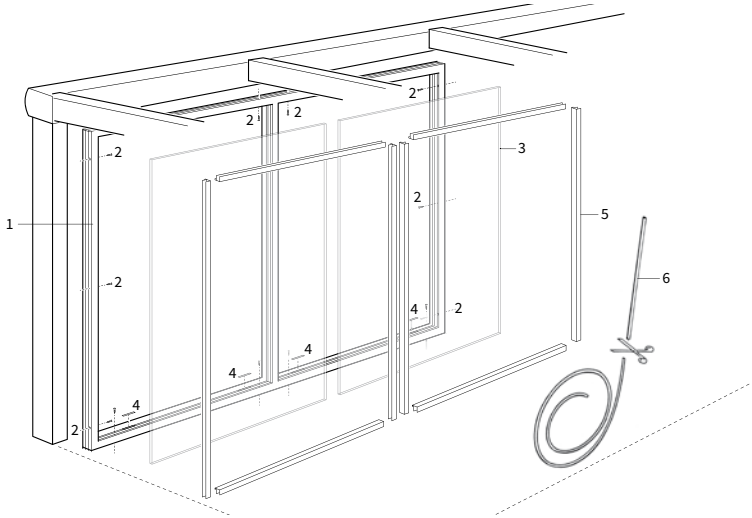

Notes

MANUFACTURERS WARRANTY

controler no.

date

particulars

Warranty conditions

The factory warranty is valid only if the assembly has been executed by a certified engineer (professional placement). During the manufacturing of its products, Verano® has used the greatest precision. However, if during the normal use and maintenance within 5 years after the purchase date, there are faults resulting from manufacture or construction errors, provided that all the instructions concerning the correct use and maintenance have been followed, Verano® will put at the dealer's disposal the replacement material, for free.

Warranty:

- The term is not extended or renewed because of repair or the replacement of faulty parts;
- Does not include the replacement of fuses, limit switches and slide contacts;
- It is Verano®'s obligation to give to the buyer whatever right to compensation or dissolution of the purchase contract;
- Verano® reserves its right, without previous notification, to carry out changes in its products;
- All our transactions occur according to the conditions deposited at the Chamber of Commerce in Eindhoven under number 17119924;
- Small colour changes can occur due to the fact that the ordered colours are manufactured according to the number or that a present steel colour is imitated;
- The paintwork is not resistant to strong chemicals and /or damage with a sharp tool;
- Some colour shade can occur due to the fact that the colours can be more or less effected by UV-radiation (sun light).

The warranty elapses:

- As a result of insufficient maintenance or incorrect use;
- The sun blind is not fitted by a certified engineer;
- Normal wear resulting from use;
- Discoloration due to effects of weather;
- Faulty assembly.

The second party does not derive a right from the warranty other than the one above mentioned, especially the right to compensation in case of consequential loss and also due to faults of third parties. Also inconsequential damage will not be compensated. The second party indemnifies us against all the consequences of the other claims of his customers.

More inspiration? Follow Verano®!

- facebook.com/verano.nl
- @veranobv
- pinterest.com/veranobv
- plus.google.com/u/0/+VeranoNl90
- linkedin.com/company/verano-b.v.
- veranobv

REGISTER YOUR PRODUCT ON VERANO.EU AND RECIEVE A 5 YEAR WARRANTY!

Congratulations on your purchase of this Verano® sun protection. You are ensured of many years of pleasure during the normal use of the product according to the appropriate operation and maintenance rules. All the materials used are adjusted to the user's objectives. The products are manufactured with the greatest care, If you have any comments, please send an e-mail to: info@verano.nl.

Please tear of this card and save it in your administration

MANUFACTURERS WARRANTY • MANUFACTURERS WARRANTY • 5 YEAR

Verano® dealer information

MANUFACTURERS WARRANTY

REGISTER YOUR PRODUCT ON VERANO.EU AND RECIEVE A 5 YEAR WARRANTY!